PBL86-55 BLDC motor

Ø86 mm frame // 55 mm stack

parvalux by maxon

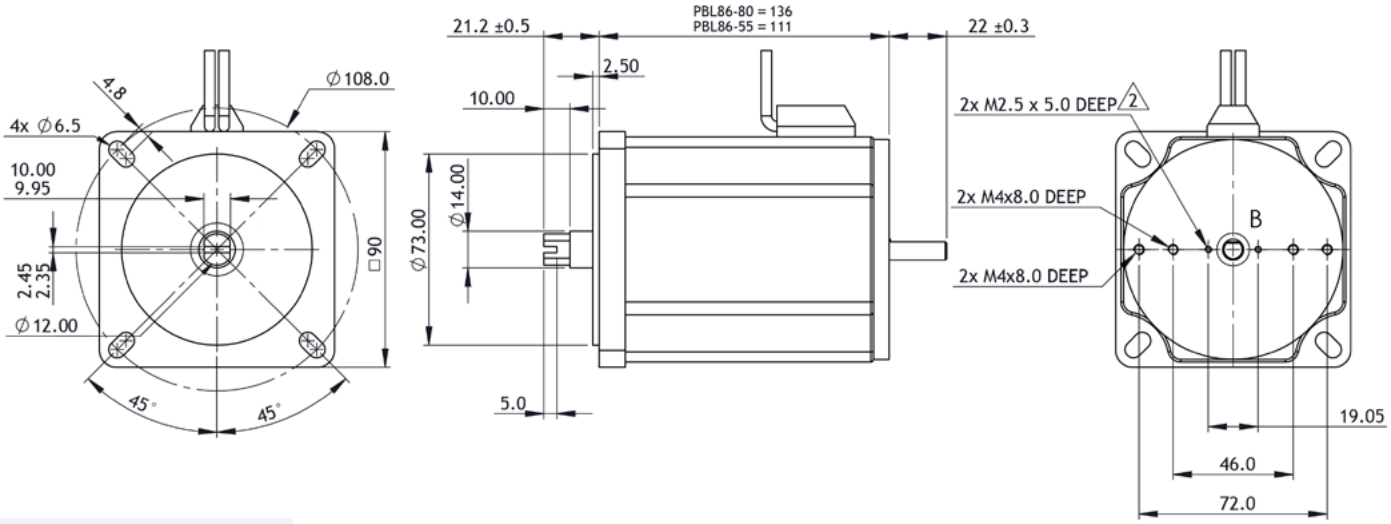

all dimensions in mm

Part number key	
Modular	######
Standard	######
Calculated data	######

Technical data			
1	Part number		776624
2	Nominal power	W	419
3	Nominal voltage	V	48
4	No load speed	rpm	4342
5	No load current	A	1.2
6	Nominal speed	rpm	4000
7	Nominal continuous torque (S1)	Nm	1.0
8	Nominal continuous current (S1)	A	10.3
9	Max Intermittent torque (S2 - 15 minutes)	Nm	1.75
10	Stall current	A	93
11	Stall torque	Nm	10.1
12	Stack length	mm	55
13	Maximum efficiency	%	85
14	Ra	Ω	0.087
15	Rl	mH	230.7
16	Speed constant	rpm/V	90.8
17	Torque constant	Nm/A	0.11
18	Speed torque gradient	rpm/Nm	439.5
19	Rotor inertia	Kgm^2	2.04×10^{-4}
20	Weight	Kg	3.20

Connection details		
Lead colour	Lead gauge	Function
Red	UL1569/26 AWG	VCC
Black	UL1569/26 AWG	GND
Blue	UL1569/26 AWG	Hall A
Green	UL1569/26 AWG	Hall B
White	UL1569/26 AWG	Hall C
Red	UL1569/14 AWG	Phase U
Yellow	UL1569/14 AWG	Phase V
Black	UL1569/14 AWG	Phase W

Thermal data			
21	Ambient temperature	°C	40

Mechanical data			
22	Radial load [distance from flange]	N [mm]	350 [15]
23	Radial play	mm [@g]	0.06 [450]
24	Axial end play	mm [@g]	0.08 [450]

Other data			
25	Number of poles		8
26	Winding type		Delta
27	Hall effect angle (electrical angle)	°	120
28	IP Rating		IP54
29	Enclosure		Enclosed
30	Insulation Class		B

Modular system

Gearbox	+L mm
GB9	138
GB12	110

Brake	+L mm
1.5 Nm	28.2

Controller
SC 50/15

Encoder	+L mm
Incremental	9

+L mm = approximate added length*

Compatible products key	
Product name	Standard combination
Product name	Modular combination

*additional length may also be required for mounting flange between components

sales@parvalux.com +44(0)1202 512575 www.parvalux.com

additional information available on request