L Box Right-angle gearbox // Bronze gears

5:1 - 60:1 ratio // 22.0 Nm

parvalux by maxon

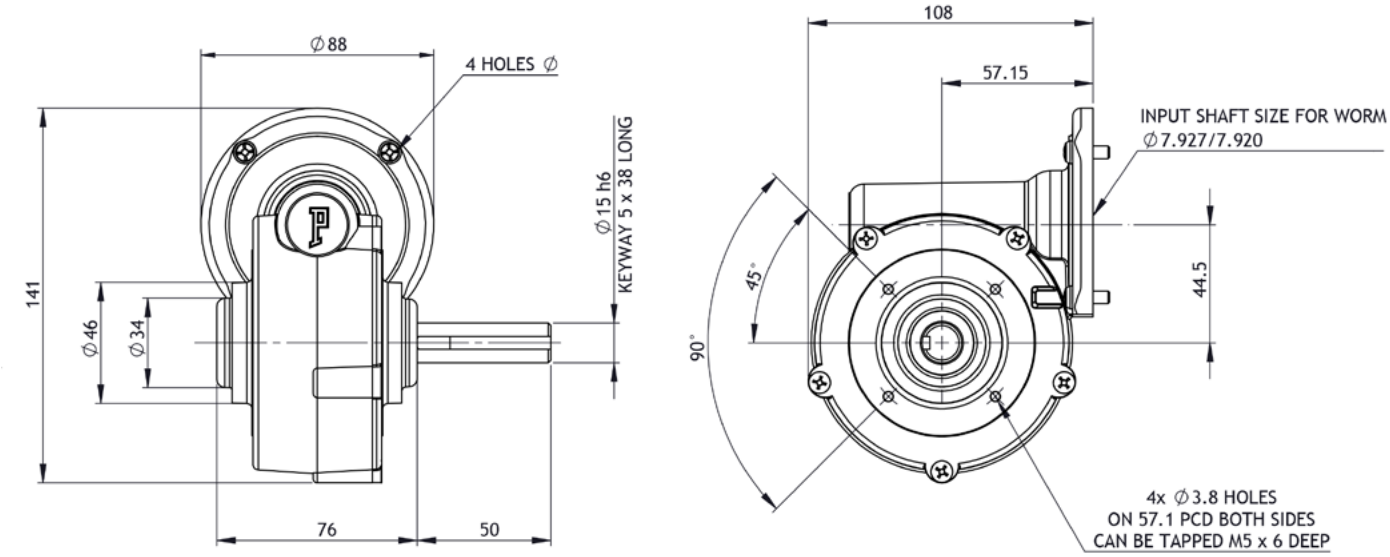

all dimensions in mm

Part number key	
Modular	######
Standard	######
Calculated data	######

[1] Other ratios available on request (:1): 7, 9

Technical data

1	Part number		-	-	-	-	-	-	-	-
2	Gear ratio [1]	:1	5	12	15	20	25	30	40	60
3	Stages		1	1	1	1	1	1	1	1
4	Max. continuous torque (S1) [2 3]	Nm	19.0	19.0	19.0	19.0	19.0	19.0	19.0	19.0
5	Max. intermittent torque [3]	Nm	22.0	22.0	22.0	22.0	22.0	22.0	22.0	22.0
6	Efficiency	%	84	80	75	73	72	65	60	45
7	Backlash	arc.min	10-25	10-25	10-25	10-25	10-25	10-25	10-25	10-25
8	Max. axial load (dynamic)	N	132	132	132	132	132	132	132	132
9	Max. radial load, 12 mm from flange	N	177	177	177	177	177	177	177	177
10	Weight	Kg	1.9	1.9	1.9	1.9	1.9	1.9	1.9	1.9
11	Gear material		Bronze	Bronze	Bronze	Bronze	Bronze	Bronze	Bronze	Bronze

[2] S1 duty cycle based on 3000 RPM input speed [3] Please refer to the thermal rating limits of the gearbox found on page 255

Compatible products

BLDC	+L mm
PBL70-70	114.0
PBL70-80	124.0

PMDC	+L mm
PM1	149.0
PM2	163.0
PM3	137.0
PM4	149.0
PM5	162.0
PM6	175.0
PM50	162.0
PM60	193.0
PM90-150	153.0
PM90-180	183.0

AC	+L mm
SD11	144.0
SD12	167.0
SD13	152.0
SD18	158.0
SD48	170.0

Gearbox output position

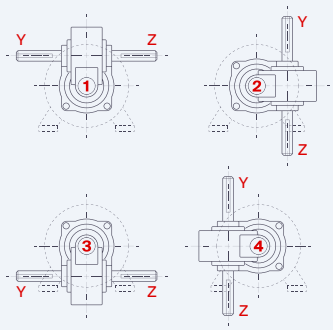

Key
Standard combination
Modular combination

+L mm = approximate added length*

*additional length may also be required for mounting flange between components