SD48 AC motor

Ø120 mm frame // 59 mm stack

parvalux by maxon

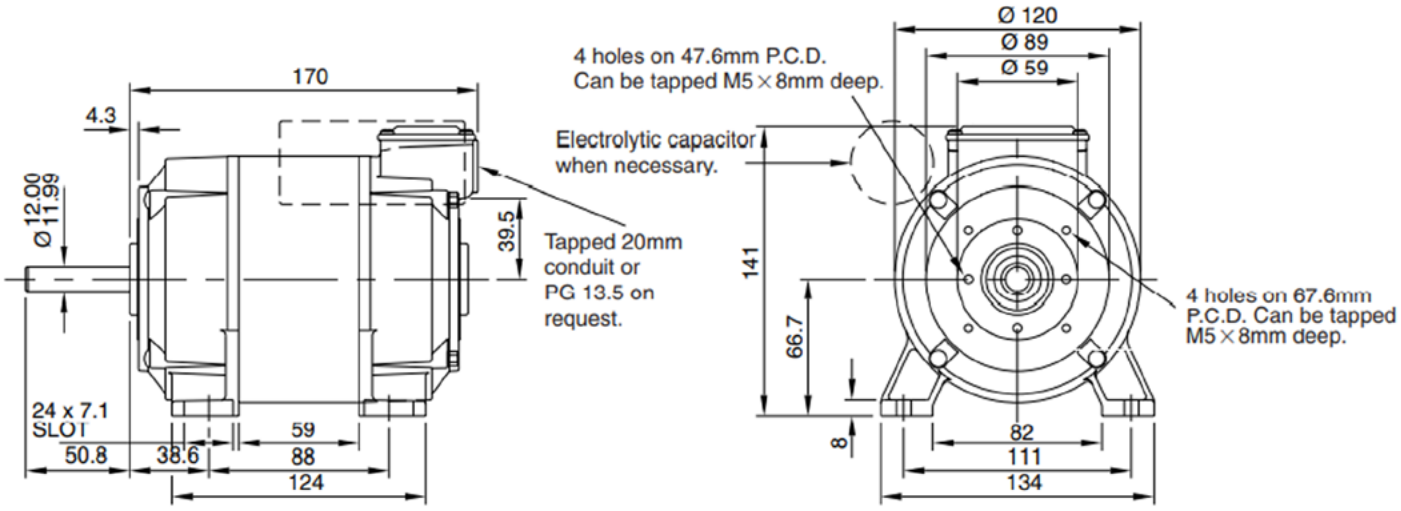

all dimensions in mm

Part number key	
Modular	######
Standard	######
Calculated data	######

Please see our customisation options page for details on the modifications available on our products. Advice and guidance on these options are available from your local sales contact.

Note: Brakes are not available on TEFC (Totally Enclosed Fan Cooled) motors.

Technical data

1	Part number		-	-	-	-	-	-	-	-
2	Phases		1	1	1	1	3	3	3	3
3	Frequency	Hz	50	50	60	60	50	50	60	60
4	Nominal voltage	V AC	230	230	115	115	400	400	230	230
5	Nominal power	W	150	190	55	100	190	250	190	250
6	Nominal speed	rpm	1400	2800	1700	3400	1400	2800	1700	3400
7	Nominal continuous torque (S1)	Nm	1.00	0.65	0.84	0.53	1.30	0.85	1.07	0.70
8	Nominal continuous current (S1)	A	1.70	1.70	-	-	0.50	0.75	-	-
9	Starting Current	A	4.25	4.25	0	0	1.25	1.88	0	0
10	Input Watts	W	308	324	308	324	300	400	300	400
11	Capacitor Value	M.F.D	40/50	40/50	40/50	40/50	-	-	-	-
12	Starting Torque Full Load	%	150	130	150	130	150	150	150	150
13	Stack length	mm	56	56	56	56	56	56	56	56
14	Number of poles		4	2	4	2	4	2	4	2
15	Rotor inertia	Kg/cm²	-	-	-	-	-	-	-	-

Thermal data

16	Ambient temperature	°C	40

Mechanical data

17	Radial load [distance from flange]	N [mm]	200 [15]

Other data

18	Weight	Kg	6.5
19	Enclosure		VENT/TEFC
20	IP Rating - Ventilated		IP20
21	IP Rating - TE/TEFC		IP54
22	Insulation Class		F
23	Type		Capacitor start, asynchronous
24	Direction		Reversible

Compatible products

Gearbox	+L mm
M Box	85.0
MWS	110.0
MIW	83.0
L Box	108.0
LWS	127.0
LIW	102.0
LIS	108.0
GB9	138.0
GB12	110.0
GB65	150.0

Brake	+L mm
0.4 Nm	35.0

Key
Standard combination
Modular combination

+L mm = approximate added length*

*additional length may also be required for mounting flange between components

sales@parvalux.com +44(0)1202 512575 www.parvalux.com

additional information available on request